SNI

SNI 07-3567-2006

Standar Nasional Indonesia

Cold rolled steel sheets and coils
(Bj D)

ICS 77.140.20

Badan Standardisasi Nasional

"Hak Cipta Badan Standardisasi Nasional, copy standar ini dibuat untuk penayangan di website Akses SNI dan tidak untuk dikomersilkan"

"Hak Cipta Badan Standardisasi Nasional, copy standar ini dibuat untuk penayangan di website Akses SNI dan tidak untuk dikomersilkan"

© BSN 2006

Copyright are protected by law. Prohibited to copy or duplicate some or all of the contents of this document in a way and in any form and may not distribute this document either electronically or printed without written permission from BSN

BSN
Gd. Manggala Wanabakti
Blok IV, Lt. 3,4,7,10.
Telp. +6221-5747043
Fax. +6221-5747045
Email: dokinfo@bsn.go.id
www.bsn.go.id

Diterbitkan di Jakarta

Translation Disclaimer

Should confusion arise in the interpretation of the English version of this SNI, please refer to the Indonesian version

"Hak Cipta Badan Standardisasi Nasional, copy standar ini dibuat untuk penayangan di website Akses SNI dan tidak untuk dikomersilkan"

© BSN 2006

"Hak Cipta Badan Standardisasi Nasional, copy standar ini dibuat untuk penayangan di website Akses SNI dan tidak untuk dikomersilkan"

© BSN 2006

Table of Contents

Table of Contens i
Introduction ii
1 Scope 1
2 Normative references 1
3 Term and Definitions 1
4 Symbol and classifications 2
5 Quality specifications 3
6 Mass 10
7 Sampling methods 11
8 Test methods 13
9 Acceptance requirements 13
10 Marking 13
Bibliography 14

"Hak Cipta Badan Standardisasi Nasional, copy standar ini dibuat untuk penayangan di website Akses SNI dan tidak untuk dikomersilkan"

Introduction

The Standar Nasional Indonesia (SNI) Baja lembaran dan gulungan canai dingin (Bj D) [*Cold Rolled steel sheets and coils (Bj D)]* is a revised edition of SNI 07-3567-1995, and developed based on the following considerations:

1. More than 5 years has elapsed since this standard was formulated and it shall be reviewed, intending to meet the consumers needs, manufactures capabilities and technology development.
2. There is an urgent need to protect the consumers from inferior imported goods by mandatory implementation of SNI standards

This standard was deliberated by stakeholders, including universities, Government, test institutions, consumers and manufacturers. The discussion was taking place in several stages, technical meetings, pre-consensus meeting and finally a consensus meeting held in Jakarta on September 16th, 2003

This standard was drafted by Technical Committee 5S, Iron, steel and steel products

"Hak Cipta Badan Standardisasi Nasional, copy standar ini dibuat untuk penayangan di website Akses SNI dan tidak untuk dikomersilkan"

"Hak Cipta Badan Standardisasi Nasional, copy standar ini dibuat untuk penayangan di website Akses SNI dan tidak untuk dikomersilkan"

Cold rolled steel sheets and coils (Bj D)

1 Scope

This standard covers scope, normative references, terms and definitions, symbols and classifications, quality specifications, mass, sampling, test methods, acceptance requirements and marking of cold rolled steel sheets and coils, excluding steel sheets and coils for electrolytic tin coating purposes.

2 Normative references

SNI 07-0358-1989, *Peraturan umum pemeriksaan baja karbon*
SNI 07-0408-1989, *Cara uji tarik untuk logam,*
SNI 07-0410-1989, *Cara uji lengkung tekan logam*
SNI 19-0406-1989, *Cara uji keras Rockwell B*
SNI 07-0601-2006, *Baja lembaran, pelat dan gulungan canai panas (Bj P)*
SNI 19-0721-1989, *Cara uji keras Rockwell T*
SNI 05-0719-1989, *Cara uji keras mikro Vickers beban 0,0098 sampai dengan 49 N*
SNI 07-0371-1998, *Batang uji tarik untuk bahan logam,*
SNI 07-0372-1998, *Batang uji lengkung untuk bahan logam*
JIS G 0303:2002, *General rules for inspection of steel*
JIS G 1253, *Iron and steel - Methods for spark atomic emission spectrometric analysis*
JIS G 3141:1996, *Cold reduced carbon steel sheets and strips*

3 Terms and definitions

3.1
cold rolled steel sheets and coils (Bj D)
steel sheets or coils, produced from hot rolled steel coils through the process of surface cleaning dan cold rolling below the recrystallization temperature

3.2
Bj D sheets
further known as steel sheets and those in the form of coils are called steel coils

3.3
dimension of steel coils
thickness and width in mm units (mm)

3.4
dimension of steel sheets
thickness, width and length in mm units (mm)

3.5
unit mass of steel sheets and coils
kilograms (kg)

3.6
nominal thickness, width and length
dimensions are specified in this standard

"Hak Cipta Badan Standardisasi Nasional, copy standar ini dibuat untuk penayangan di website Akses SNI dan tidak untuk dikomersilkan"

3.7
tolerances
tolerance limits of nominal thickness, width and length

4 Symbols and classifications

4.1 Bj D symbol

Symbols to be used for cold rolled coil/steel products are shown as follows

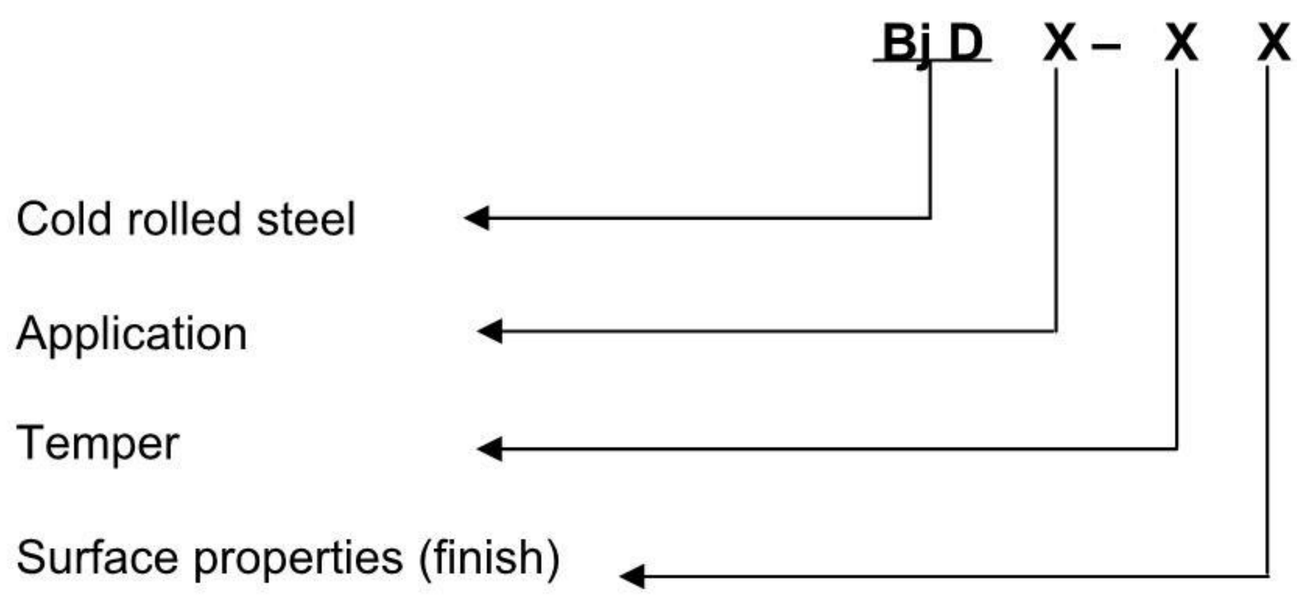

Example : Bj DC-SR means cold rolled steel for commercial application, standard temper and dull surface finish

4.2 Bj D classifications

Bj D classification is based on its application, temper, surface finish and stated in Table 1, Table 2 and Table 3

Table 1 Classification of cold rolled steel (Bj D)

Symbol	Application
Bj D C	Commercial quality
Bj D D1	Drawing quality
Bj D D2	Deep drawing quality
Bj D D3	Non aging deep drawing quality

Table 2 Temper

Symbol	Temper
A	As annealed
S	Standard
1	Non annealed
2	½ hard
4	¼ hard
8	1/8 hard

Note 1 For commercial cold rolled steel sheets and coils (Bj DC) with standard temper (S) and as annealled (A) a symbol T is added after the class symbol, whenever the

"Hak Cipta Badan Standardisasi Nasional, copy standar ini dibuat untuk penayangan di website Akses SNI dan tidak untuk dikomersilkan"

purchaser/consumer request assurance of tensile test values and the symbol shall be Bj DCT-SR

Note 2 For commercial cold rolled steel sheets and coils (Bj DD3) with standard temper (S) a symbol N is added after the class symbol whenever the purchaser/consumer request assurance of non aging property of the steel and
the symbol shall be Bj DD3N-SR

Table 3 Surface finish quality

Symbol	Surface finish quality
R	Dull finish
K	Bright finish
Note Table 3 does not apply for as annealed (A) BjD	

5. Quality requirements

5.1 Nominal thickness and thickness tolerance

5.1.1 Nominal thickness

Nominal thickness of Bj D is specified in Table 4

Table 4 Nominal thickness

Units in mm

0,20	0,35	0,60	0,90	1,30	1,80	2,50
0,25	0,40	0,70	1,00	1,40	1,90	2,60
0,30	0,45	0,75	1,10	1,50	2,00	2,80
	0,50	0,80	1,20	1,60	2,30	3,00

5.1.2 Thickness tolerance

Thickness tolerances are classified into class A and class B

Table 5 Thickness tolerances for mother coil (A)

Units in mm

Nominal thickness	Width (L)			
	≤ 630	630 < L≤ 1000	1000 < L ≤ 1250	1250 < L ≤ 1600
0,20	± 0,01	± 0,01	± 0,015	-
0,25	± 0,013	± 0,013	± 0,015	-
0,30	± 0,030	± 0,030	± 0,030	-
0,35	± 0,030	± 0,030	± 0,030	-
0,40	± 0,040	± 0,040	± 0,040	± 0,040
0,45	± 0,040	± 0,040	± 0,040	± 0,050
0,50	± 0,050	± 0,050	± 0,050	± 0,060
0.60	± 0,050	± 0,050	± 0,050	± 0,060
0,70	± 0,060	± 0,060	± 0,060	± 0,070
0,75	± 0,060	± 0,060	± 0,060	± 0,070

0,80	± 0,060	± 0,060	± 0,060	± 0,070
0,90	± 0,070	± 0,070	± 0,080	± 0,080
1,00	± 0,070	± 0,070	± 0,080	± 0,080
1,10	± 0,070	± 0,070	± 0,080	± 0,080
1,20	± 0,070	± 0,070	± 0,080	± 0,090
1,30	± 0,080	± 0,080	± 0,090	± 0,100
1,40	± 0,080	± 0,080	± 0,090	± 0,100
1,50	± 0,100	± 0,100	± 0,110	± 0,110
1,60	± 0,100	± 0,100	± 0,110	± 0,110
1,80	± 0,100	± 0,110	± 0,120	± 0,130
1,90	± 0,120	± 0,120	± 0,140	± 0,140
2,00	± 0,120	± 0,120	± 0,140	± 0,140
2,30	± 0,140	± 0,140	± 0,140	± 0,150
2,50	± 0,140	± 0,140	± 0,140	± 0,150
2,60	±0,160	±0,160	±0,160	±0,170
2,80	±0,160	±0,160	±0,160	±0,170
3.00	±0,160	±0,160	±0,170	±0,170

Table 6 Thickness tolerances for cuts in longitudinal direction (B)

Units in mm

Nominal Thickness (t)	**Width (L)**			
	≤ 160	**160 < L ≤ 250**	**250 < L ≤ 400**	**400 < L ≤ 650**
0,20	± 0,010	± 0,010	± 0,010	± 0,010
0,25	± 0,015	± 0,015	± 0,015	± 0,015
0,30	± 0,030	± 0,030	± 0,030	± 0,030
0,35	± 0,030	± 0,030	± 0,030	± 0,030
0,40	± 0,035	± 0,040	± 0,040	± 0,040
0,45	± 0,035	± 0,040	± 0,040	± 0,040
0,50	± 0,035	± 0,040	± 0,040	± 0,040
0.60	± 0,040	± 0,045	± 0,045	± 0,045
0,70	± 0,040	± 0,045	± 0,045	± 0,045
0,75	± 0,040	± 0,050	± 0,050	± 0,050
0,80	± 0,040	± 0,050	± 0,050	± 0,050
0,90	± 0,040	± 0,050	± 0,050	± 0,050
1,00	± 0,050	± 0,050	± 0,050	± 0,060
1,10	± 0,050	± 0,050	± 0,050	± 0,060
1,20	± 0,050	± 0,060	± 0,050	± 0,060
1,30	± 0,050	± 0,060	± 0,060	± 0,060
1,40	± 0,050	± 0,060	± 0,060	± 0,060
1,50	± 0,060	± 0,070	±0,080	±0,080
1,60	± 0,060	± 0,070	±0,080	±0,080
1,80	± 0,060	± 0,070	±0,080	±0,080
1,90	± 0,070	±0,080	±0,080	±0,090
2,00	± 0,070	±0,080	±0,080	±0,090
2,30	± 0,070	±0,080	±0,080	±0,090
2,50	±0,080	±0,090	±0,090	± 0,100

"Hak Cipta Badan Standardisasi Nasional, copy standar ini dibuat untuk penayangan di website Akses SNI dan tidak untuk dikomersilkan"

2,60	±0,080	±0,090	±0,090	±0,100
2,80	±0,080	±0,090	±0,090	±0,100
3.00	±0,080	±0,090	±0,090	±0,100

5.2 Nominal width and width tolerance

Nominal widths are specified in Table 7 and tolerances for Bj D are divided into class A, B, C and specified in Table 8, Table 9 and Table 10

Table 7 Nominal width

Units in mm

655	762	882	914	940
960	990	1000	1027	1060
1100	1170	1219	1250	1300
1600	-	-	-	-

Table 8 Width tolerances for as rolled Bj D product (A)

Units in mm

Width (L)	Tolerance
L < 1250	+ 7 0
L ≥ 1250	+10 0

Table 9 Width tolerances for rolled edge cut Bj D product (B)

Units in mm

Width (L)	Tolerance
L < 1250	+ 3 0
L ≥ 1250	+ 4 0

Table 10 Width tolerances for rolled longitudinal cut Bj D products

Units in mm

Nominal thickness (T)	Width (L)			
	≤ 160	160 < L ≤ 250	250 < L ≤ 400	400 < L ≤ 650
T < 0,60	± 0,15	± 0,20	± 0,25	± 0,30
0,60 ≤ T< 1,00	± 0,20	± 0,25	± 0,25	± 0,30
1,00 ≤ T<1,60	± 0,20	± 0,30	± 0,30	± 0,40
1,60 ≤ T<2,50	± 0,25	± 0,35	± 0,45	± 0,50
2,50 ≤ T ≤ 3,00	± 0,30	± 0,40	± 0,45	± 0,50

"Hak Cipta Badan Standardisasi Nasional, copy standar ini dibuat untuk penayangan di website Akses SNI dan tidak untuk dikomersilkan"

"Hak Cipta Badan Standardisasi Nasional, copy standar ini dibuat untuk penayangan di website Akses SNI dan tidak untuk dikomersilkan"

5.3 Nominal length and length tolerance

Length is measured in the rolling direction at the side edge of the steel sheet. Nominal length and length tolerance of the steel sheet are specified in Table 11

Table 11 Bj D Length tolerances

Units in mm

Length (P)	Tolerance
P < 200	+ 10 0
2000 ≤ P < 4000	+ 15 0
4000 ≤ P < 6000	+ 20 0

5.4 Shape tolerance

5.4.1 Flatness tolerance

Flatness tolerance is divided into class A and B, the maximum flatness value is specified in Table 12 and Table 13.

Table 12 Flatness tolerance A

Units in mm

Width (L)	Full deviation from flatness	Side deviation from flatness	Mid deviation from flatness
L < 1000	12	8	6
1000 ≤ L < 1250	15	9	8
1250 ≤ L < 1600	15	11	8
L ≥ 1600	20	13	9

Table 13 Flatness tolerance B

Units in mm

Width (L)	Full deviation from flatness	Side deviation from flatness	Mid deviation from flatness
L < 1000	2	2	2
1000 ≤ L < 1250	3	2	2
1250 ≤ L < 1600	4	3	2
L ≥ 1600	5	4	2
NOTE Flatness tolerance B is applied to stretcher-leveled steel sheets			

5.4.2 Edge camber tolerances

The maximum edge camber tolerances for steel sheets are specified in Table 14 and shown in Figure 1

"Hak Cipta Badan Standardisasi Nasional, copy standar ini dibuat untuk penayangan di website Akses SNI dan tidak untuk dikomersilkan"

Table 14 Edge camber tolerances

Classification / Nominal width	Length of steel sheet (P)	
	P < 2000	P > 2000 steel coil
30 ≤ L < 60	Max. 8	8 for each 2000 cut lengths
60 ≤ L < 630	Max. 4	4 for each 2000 cut lengths
L > 630	Max. 2	2 for each 2000 cut lengths

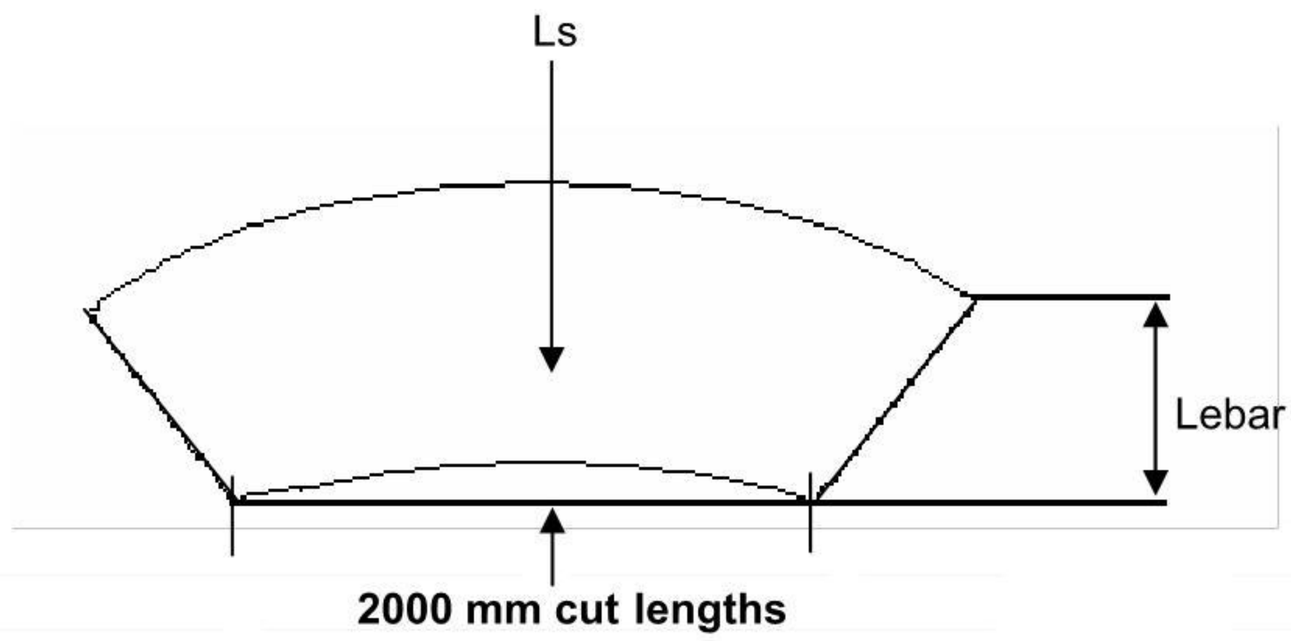

Note:
Ls is edge camber in longitudinal direction

Figure 1 Side camber in longitudinal direction

"Hak Cipta Badan Standardisasi Nasional, copy standar ini dibuat untuk penayangan di website Akses SNI dan tidak untuk dikomersilkan"

5.4.3 Out - of- square ness tolerances for steel sheets

The square ness tolerance for cut lengths from steel coils are measured from the diagonal differences, as shown in Figure 2 and its value shall be not more than 1 % of nominal width

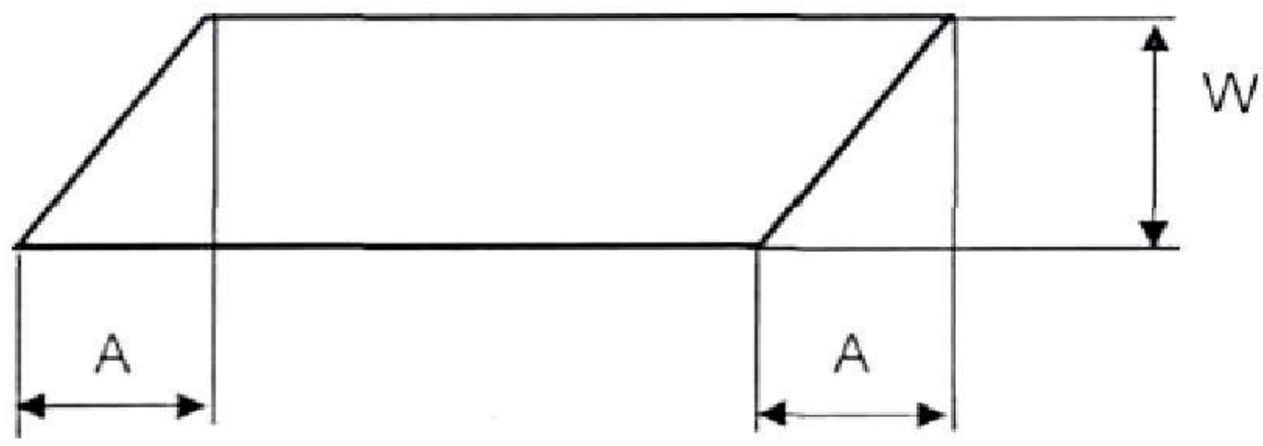

Note:
A measured value
W nominal width
A/W max. 1%

Figure 2 Square-ness of steel sheets

5.5 Chemical composition

The chemical composition of Bj D is specified in Table 15

Table 15 Chemical composition of Bj D

Symbol	Chemical composition (%)			
	C (max.)	Mn (max.)	P (max.)	S (max.)
Bj DC	0,12	0,50	0,040	0,045
Bj DD 1	0,10	0,45	0,030	0,025
Bj DD 2	0,08	0,40	0,030	0,020
Bj DD 5	0,06	0,40	0,030	0,020

5.6 Mechanical properties

5.6.1 Mechanical properties of Bj D are specified in Table 16, Table 17 and Tabel 18.
5.6.2 Tensile strength, elongation and non aging properties

"Hak Cipta Badan Standardisasi Nasional, copy standar ini dibuat untuk penayangan di website Akses SNI dan tidak untuk dikomersilkan"

Table 16 Tensile strength and elongation

Units in mm

Steel class	Tensile strength N/mm^2	Elongation (%)						Tensile test specimen
Nominal thickness (mm) / Class symbol	T ≥ 0,20 (min)	0,25≤t<0,40 (min)	0,40≤t<0,60 (min)	0,60≤t<1,00 (min)	1,00≤t<1,60 (min)	1,60≤t<2,50 (min)	≥ 2,50 (min)	
Bj DC	270	32	34	37	38	39		Comply with SNI 07-0371-1998, *Batang uji-tarik untuk bahan logam No 5.* In rolling direction
Bj DD1	270	34	36	39	40	41		
Bj DD2	270	36	38	41	42	43		
Bj DD3	270	36	38	41	42	43		

Note

1. Tensile test results for Bj DC specified in Table 16 should not be used whenever the tensile test values are assured, therefore by adding T the specification symbol Bj DCT shall be used.
2. For thicknesses < 0,60 mm, the tensile test may be omitted
3. The value in the Table is valid for steel sheets with width ≥ 30 mm
4. Bj D classified as Bj DD3 shall have properties complying with Table 16 for a guarantee period of 6 months after dispatch.

5.6.3 Hardness

Hardness of Bj D with temper grade 1/8 hard, ¼ hard, ½ hard and un annealled are specified in Table 17

Table 17 Hardness

Temper grade	Temper symbol	Hardness	
		HV	HRB
Hard	1	Min 170	Min 85
½ hard	2	135 - 185	74 - 89
¼ hard	3	115 - 150	65 - 80
1/8 hard	4	95 - 130	50 - 71

5.6.4 Bend ability

The bend ability of Bj D is specified in Table 18

Table 18 Bend ability

Temper grade	Temper symbol	Bend test		Bend test specimen
		Bend angle	Inner radius	
As annealled	A	180°	0 x thickness	In accordance with the requirements of SNI 07-0371-1998 , *Batang uji tarik untuk bahan logam, No 3* , made in the rolling direction
Standard	S	180°	0 x thickness	
Non annealled	1	-	-	
½ hard	2	180°	1 x thickness	
¼ hard	4	180°	0,5 x thickness	
1/8 hard	8	180°	0 x thickness	
Note Bend test shall be omitted for as annealled steel (A) and standard (S) steel				

5.7 Appearance

a. Bj D can be coated with suitable oil or specified oil
b. Bj D shall be free of imperfections such as holes, tears and laminations

6 Mass

The mass of Bj D sheets and coils shall be stated in kilograms (kg) units and verified as follows:

6.1 Mass of Bj D sheets

To calculate the mass of Bj D sheets the methods in Table 19 shall be applied, where the nominal dimensions are the main parameters.

"Hak Cipta Badan Standardisasi Nasional, copy standar ini dibuat untuk penayangan di website Akses SNI dan tidak untuk dikomersilkan"

"Hak Cipta Badan Standardisasi Nasional, copy standar ini dibuat untuk penayangan di website Akses SNI dan tidak untuk dikomersilkan"

Table 19 Calculation of mass of Bj D sheets

Calculation sequence	Calculation method	Calculation results rounding of numbers
Specific mass (kg/mm.m^2)	7,85 (mass of 1 mm thick steel sheet with area of 1 m^2)	
Mass per unit area (kg/m^2) or unit mass	Specific mass (kg/mm) x thickness of plate (mm)	Rounded to 4 significant numbers
Cross section area (m^2)	Width (m) x Length (m)	Rounded to 4 significant numbers
Mass per sheet (kg)	Mass per unit area (kg/m^2) x area (m^2)	Rounded to 3 significant numbers
Mass per lot (kg)	Mass per sheet (g) x number of equal sized sheets in one lot	Rounded numbers in kg
Total mass (kg)	Total mass of the whole lot	Rounded numbers in kg

6.2 Mass of Bj D coils

Mass of coils shall be determined by actual weighing and expressed in kgs units.

7 Sampling methods

a Sampling shall be conducted by authorized personnel.
b Products to be tested shall be grouped to facilitate identification and each lot shall consists of the same grade, class, size and chemical composition.
c. The authorized sampler shall be given free access by the manufacturer to perform his duty.
d. Samples shall be taken at random.
e. From each party of coils up and including 10 (ten) coils with the same specification/grade, one sample sheet shall be taken and from subsequent multiple of 10 (ten) coils another sample sheet shall be taken but not more than 10 (ten) samples, one meter from outer edge of the coil.
f Steel sheets of the same specification/grade exceeding 3000 sheets, one sample shall be taken and from subsequent multiple of 3000 sheets 1 (one) sample sheet shall be taken but not more than 10 (ten) samples.

8 Test method

8.1 Dimensions

8.1.1 Thickness

The thickness shall be determined at 5 (five) locations in the transverse direction not less than 25 mm from the edge and the average value calculated.

8.1.2 Width and tolerance

Width shall be measured in the transverse direction from both edge sides of the steel sheet.

8.1.3 Length

Length shall be measured in the rolling direction from the edge of the steel sheet.

8.2 Appearance (finish)

Appearance test shall be determined visually without use of any auxiliary tools.

8.3 Shape

8.3.1 Flatness

Measurement of flatness is carried out on a specimen lying under its own weight on a flat surface. The maximum distance between the lower surface of the sheet and the flat horizontal surface is the deviation from flatness.

8.3.2 Camber

Camber is the deviation of a side edge parallel to the rolling direction as shown in Figure 3

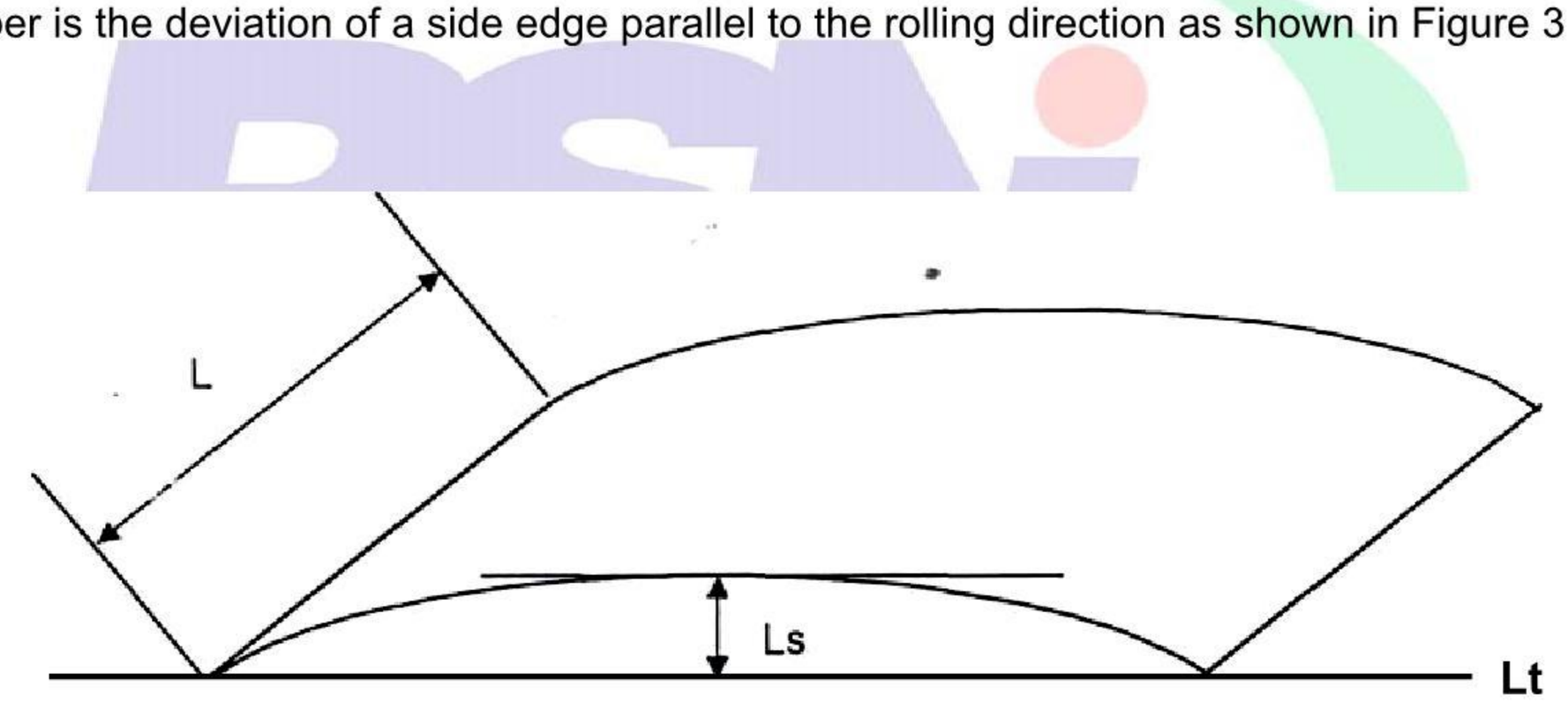

Note:
L is width of steel sheet or coil, in mm
Ls is camber, in mm
Lt is side straight line

Figure 3 Measurement of camber

"Hak Cipta Badan Standardisasi Nasional, copy standar ini dibuat untuk penayangan di website Akses SNI dan tidak untuk dikomersilkan"

"Hak Cipta Badan Standardisasi Nasional, copy standar ini dibuat untuk penayangan di website Akses SNI dan tidak untuk dikomersilkan"

8.3.3 Measurement of out-of square

The steel sheet specimen is laid under its own weight on a flat surface, each diagonal is measured and the difference between the two diagonals is a measure of out-of square.

8.4 Chemical composition

The chemical composition is determined in accordance with SNI 07-0308-1989, *Cara uji komposisi baja* or determined by spectrometric analysis in accordance with JIS G 1253-1997, *Iron and steel methods for spark emission spectrometric analysis*

8.5 Tensile test

The tensile test is carried out according to SNI 07-0408-1989, *Cara uji tarik untuk logam* with using test specimen in accordance with SNI 07-0371-1998, *Batang uji tarik untuk bahan logam,* test specimen No. 5

8.6 Hardness test

The hardness test is carried out in accordance with SNI 19-0406-1989, *Cara uji keras Rockwell B*, or SNI 19-0721-1989, *Cara uji keras Rockwell T* or SNI 05-0719-1989, *Cara uji keras mikro Vickers beban 0,0098 sampai dengan 49 N*

8.7 Bend test

Bend test is carried out according to SNI 07-0410-1989, *Cara uji lengkung tekan logam*

9 Acceptance requirements

The steel sheet and steel coil is accepted whenever all the quality requirements are met.

9.1 The steel sheet and steel coil is accepted whenever all the quality requirements are met.

9.2 If part of the specified requirements are less than specified, a retest shall be permitted on twice the number of specimens used for the initial test from the same lot.

9.2.1 If the retest specimen meet all the requirements of this specification, the lot is accepted.

9.2.2 If the any retest specimen fails, the lot is rejected.

10 Marking

Each lot of cold rolled steel sheet and coil inpected shall be properly tagged with:

a. Name of manufacturer and trade name
b. Type of steel
c. Specification of steel sheets and steel coils
d. Size (thickness x width x length)
e. Identification number
f. Number of sheets in each lot

Bibliography

JIS G 3141:1996, *Cold-reduced carbon steel sheets and strips.*

"Hak Cipta Badan Standardisasi Nasional, copy standar ini dibuat untuk penayangan di website Akses SNI dan tidak untuk dikomersilkan"

“Hak Cipta Badan Standardisasi Nasional, copy standar ini dibuat untuk penayangan di website Akses SNI dan tidak untuk dikomersilkan"

"Hak Cipta Badan Standardisasi Nasional, copy standar ini dibuat untuk penayangan di website Akses SNI dan tidak untuk dikomersilkan"

© BSN 2006

“Hak Cipta Badan Standardisasi Nasional, copy standar ini dibuat untuk penayangan di website Akses SNI dan tidak untuk dikomersilkan"

"Hak Cipta Badan Standardisasi Nasional, copy standar ini dibuat untuk penayangan di website Akses SNI dan tidak untuk dikomersilkan"

BADAN STANDARDISASI NASIONAL - BSN
Gedung Manggala Wanabakti Blok IV Lt. 3,4,7,10
Jl. Jend. Gatot Subroto, Senayan Jakarta 10270
Telp: 021- 574 7043; Faks: 021- 5747045; e-mail : bsn@bsn.go.id

© BSN 2006